Iowa State University

Electrical And Computer Engineering

EE 230

LAB 7 REPORT

November _5_, 2025

Partner 1 Isaiah Pridie

Partner 2

Introduction

Provide an overview of what you did in this lab.

In this lab we explored how different diodes behave by measuring their current-voltage (I-V) characteristics in both forward and reverse bias. Using the parameter analyzer and simple bench circuits, we compared a standard diode, LEDs, and Zener diodes to see how each one turns on, limits voltage, or breaks down. We also tested several small diode networks to learn how to predict which does conduct in different circuit configurations.

A Diode I-V Characteristics with Parameter Analyzer

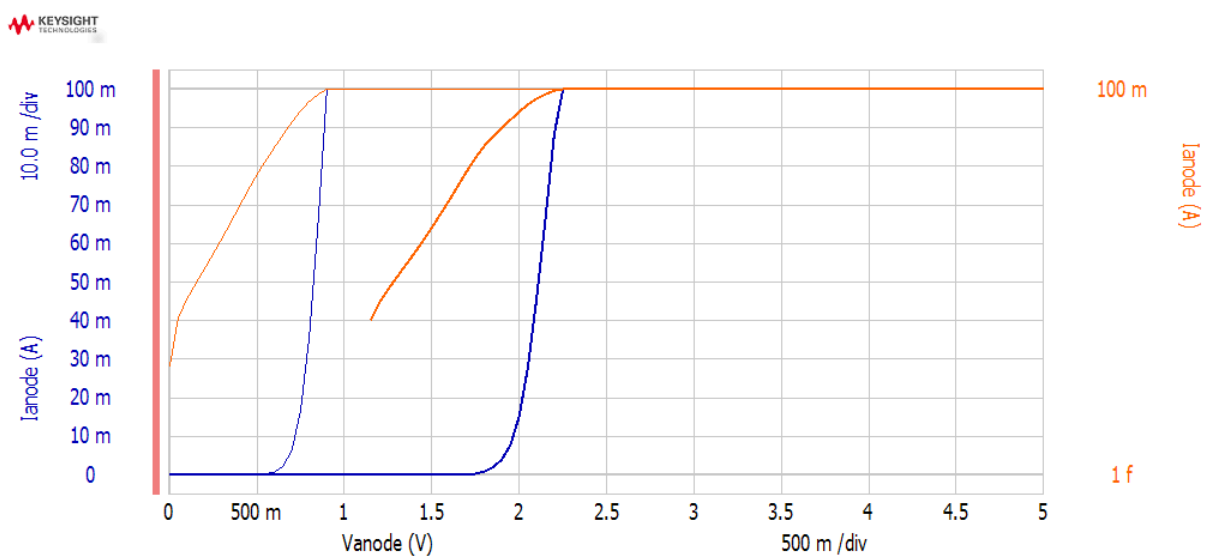

Figure 1: I-V Characteristics of 1N4006 Diode & Red LED

Describe the forward bias graphs

The graphs show a clear activation voltage where the output immediately spikes and stays there as soon as input voltage threshold is reached.

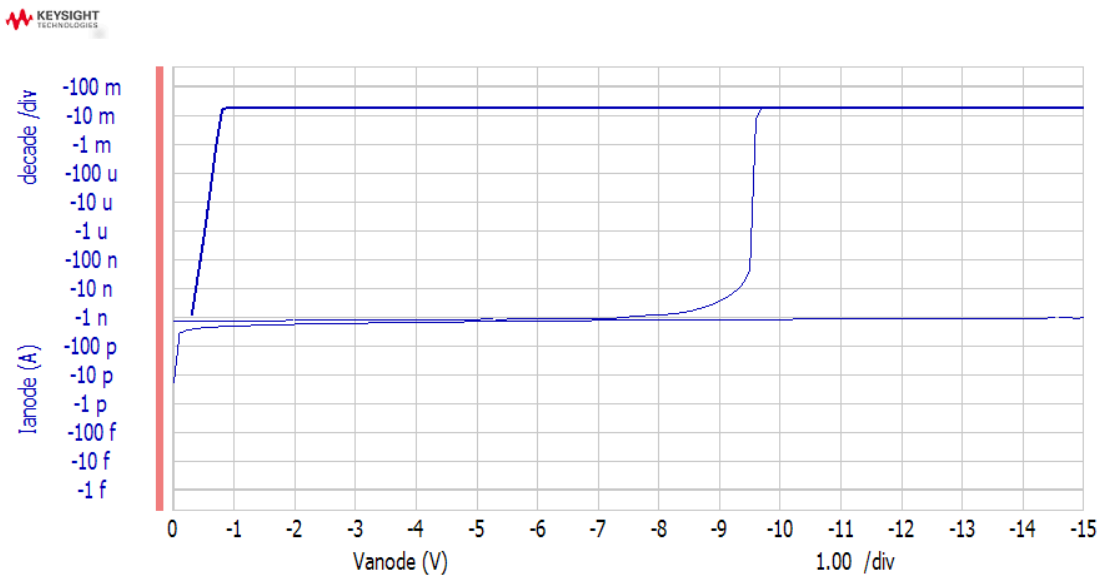

Figure 2: Reverse I-V Characteristics of 1N4006 Diode, 5V Zener, and 10V Zener Diodes
Top curve is 5V Zener. Middle curve is 10V Zener Bottom curve is 1N4006 Diode

Describe the reverse bias graphs

For the reverse bias, you can see that it takes MUCH more voltage to activate them (volts instead of mV, so 3 magnitudes+ more voltage). In fact, one of them didn't even activate yet.
But it shows the same features as the previous graph where we can see enough input voltage activates the element and makes it output a voltage.

B Diode I-V Characteristics at the Lab Bench

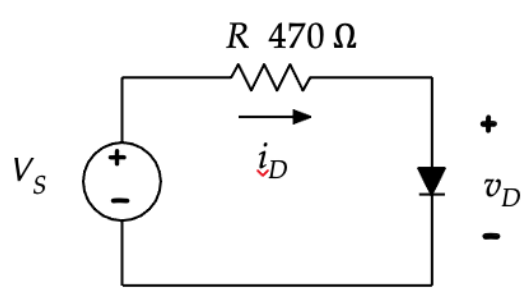

Figure 1: Resistor and diode circuit from the lab document

The table below shows the measured voltage and calculated current of the 1N4006 diode:
Resistor value is 464 ohms.

V_S (V)	v_D	i_D	V_S (V)	v_D	i_D
-10	-9.994 V	-21.538mA	+3	0.685 V	1.47629mA
-8	-7.995 V	-17.230mA	+4	0.700 V	1.50862mA
-6	-5.996 V	-12.922mA	+5	0.712 V	1.53448mA
-4	-3.997 V	-8.6142mA	+6	0.720 V	1.55172mA
-2	-1.997	-4.3038mA	+7	0.727 V	1.15668mA
0	0.0012 V	2.58620uA	+8	0.733 V	1.57974mA
+1	0.606 V	1.3060mA	+9	0.738 V	1.59051mA
+2	0.661 V	1.4245mA	+10	0.743 V	1.60129mA

Table 1: I-V values for the 1N4006 diode.

The table below shows the measured voltage and calculated current of 1N7433 Zener Diode:

V_S (V)	v_D	i_D	V_S (V)	v_D	i_D
-10	-4.990 V	-10.754mA	+3	0.747 V	1.60991mA
-8	-4.905 V	-10.571mA	+4	0.758 V	1.63362mA
-6	-4.705 V	-10.140mA	+5	0.766 V	1.65086mA
-4	-3.886 V	-8.375mA	+6	0.773 V	1.66594mA
-2	-1.997 V	-4.3038mA	+7	0.779 V	1.67887mA
0	0.001 V	2.15517uA	+8	0.784 V	1.68965mA
+1	0.693 V	1.4935mA	+9	0.788 V	1.69827mA
+2	0.731 V	1.5754mA	+10	0.792 V	1.70689mA

Table 2: I-V values for the 1N7433 Zener diode.

Explain what Table 1 and Table 2 show about diodes and Zener diodes. Be specific in describing how the two types of diodes are similar and dissimilar. What might an application of a Zener diode be?

The does perform very similarly at 0+ voltages, but different at negative voltages; table 1 shows a higher negative voltage output when a negative voltage is applied. This could be used to help

filter or cut the output voltage by a factor when input is negative. Perhaps for your application a positive output voltage is good and a negative voltage isn't necessarily bad, but you cannot have it as high. Perhaps some elements further down are ok accepting a large positive voltage but not a high negative voltage so you have to reduce it.

C Simple Diode Circuits

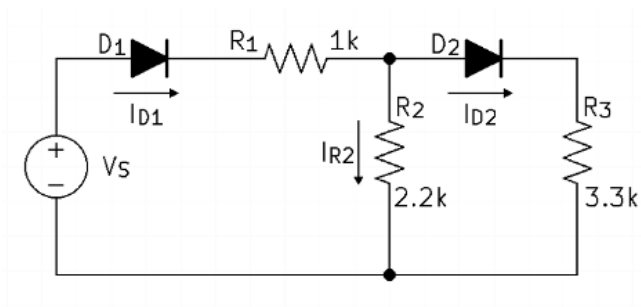

Figure 2: First circuit given for Exercise B

According to your math, for the first circuit, which diodes are on?

At 1V, only Diode 1 is on. At 5 V, both diodes are on.

Circuit 1:

$R_1 = 1k,\ R_2 = 2.2k,\ R_3 = 3.2k \quad V = 1, 5$

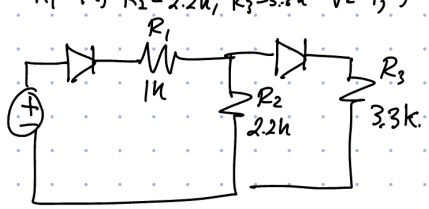

let $V_i = 1V$

$V_x = V_i - 0.7V = 0.3V$

$V_a = \frac{R_2}{R_1+R_2} \cdot V_x = 0.206V$

$I_{R_2} = \frac{V_a}{R_2} = 0.094mA$ 94μA

$I_{D1} = I_{R_1} = \frac{V_i - V_a}{R_1} = 0.094mA$

$5V - 0.7 - I(1k + 2.2k) = 0V$

$I = \frac{4.3V}{3.2k\Omega} = 1.34mA$

V_{drop} of $R_1 \rightarrow V = (1.34mA)(1k) = 2.96V$

$2.96V > 0.7 \rightarrow D_2$ turns on

let $V = 5V$: both diodes will be on

$D_1 = V_x = 5 - 0.7 = 4.3V$

$D_{EC}\ V_b = V_a - 0.7 = 4.3V \rightarrow 1.8V$

$\frac{V_x - V_a}{R_1} = \frac{V_a}{R_2} + \frac{V_b}{R_3} \rightarrow \frac{V_a}{R_2} + \frac{V_a - 0.7}{R_3}$

$V_a = 2.6V,\ V_b = 1.8V$

$I_{D1} = I_{R1} = \frac{4.3 - 2.6}{100} = 1.7mA$

$I_{R2} = \frac{2.6}{2.2k} = 1.2mA$

$I_{D2} = \frac{1.9}{3.3k} = 0.57mA$

The table below shows the measured currents for circuit one:

Condition	Calculated			Measured		
	I_{D1}	I_{D2}	I_{R2}	I_{D1}	I_{D2}	I_{R2}
1 V	0.094m A	0	0.094m A	0.148mA	0.640uA	0.174mA
5 V	*1.7mA*	*0.57mA*	*1.2mA*	1.809mA	0.601mA	1.155mA

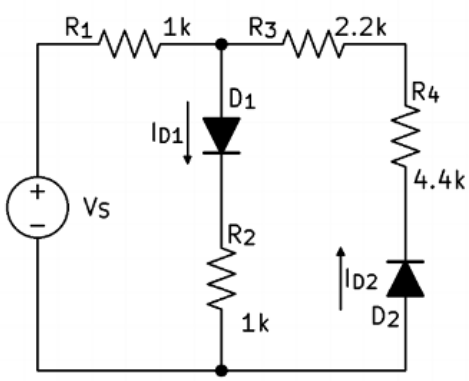

Figure 3: Second circuit given for Exercise B

According to your math, for the second circuit, which diodes are on?

At 5 volts, only diode 1 is on. At -5 volts only diode 2 is on assuming ground (it is) is the node connected to the anode of D2 and the negative terminal of Vs

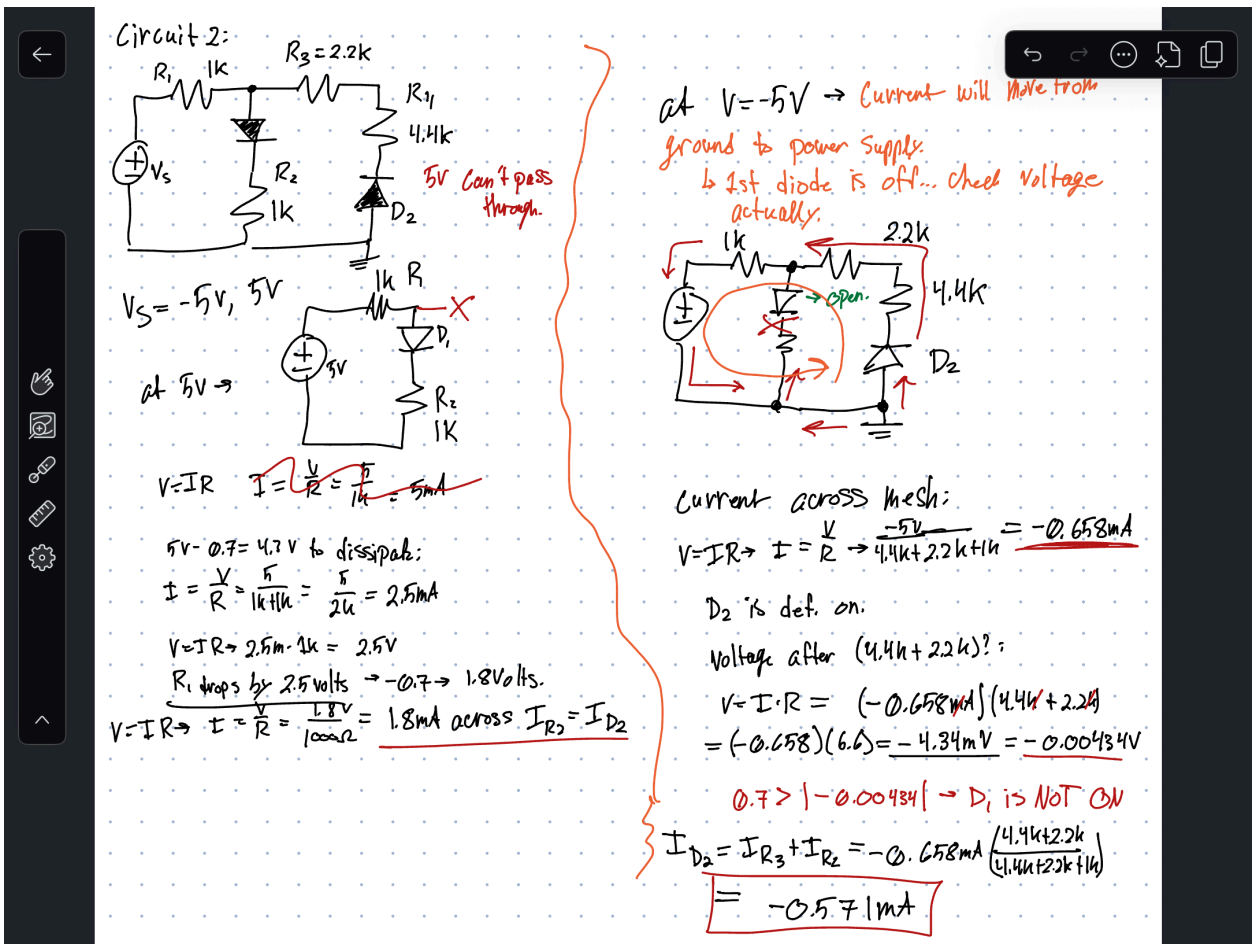

The table below shows the calculated and measured currents for circuit two:

Condition	Calculated		Measured	
	I_{D1}	I_{D2}	I_{D1}	I_{D2}
$-5\,V$	*1.8mA*	*0*	*0.002uA*	*-0.583mA*
$5\,V$	*0*	*-0.571mA*	*2.184mA*	*0.004uA*

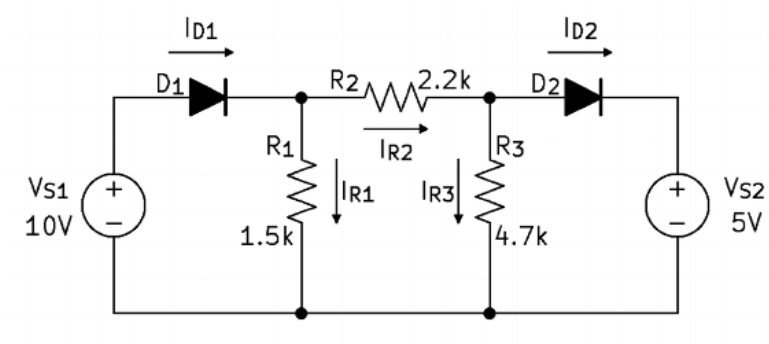

Figure 4: Third circuit given for Exercise B

According to your math, for the third circuit, which diodes are on?
All are on at both voltages

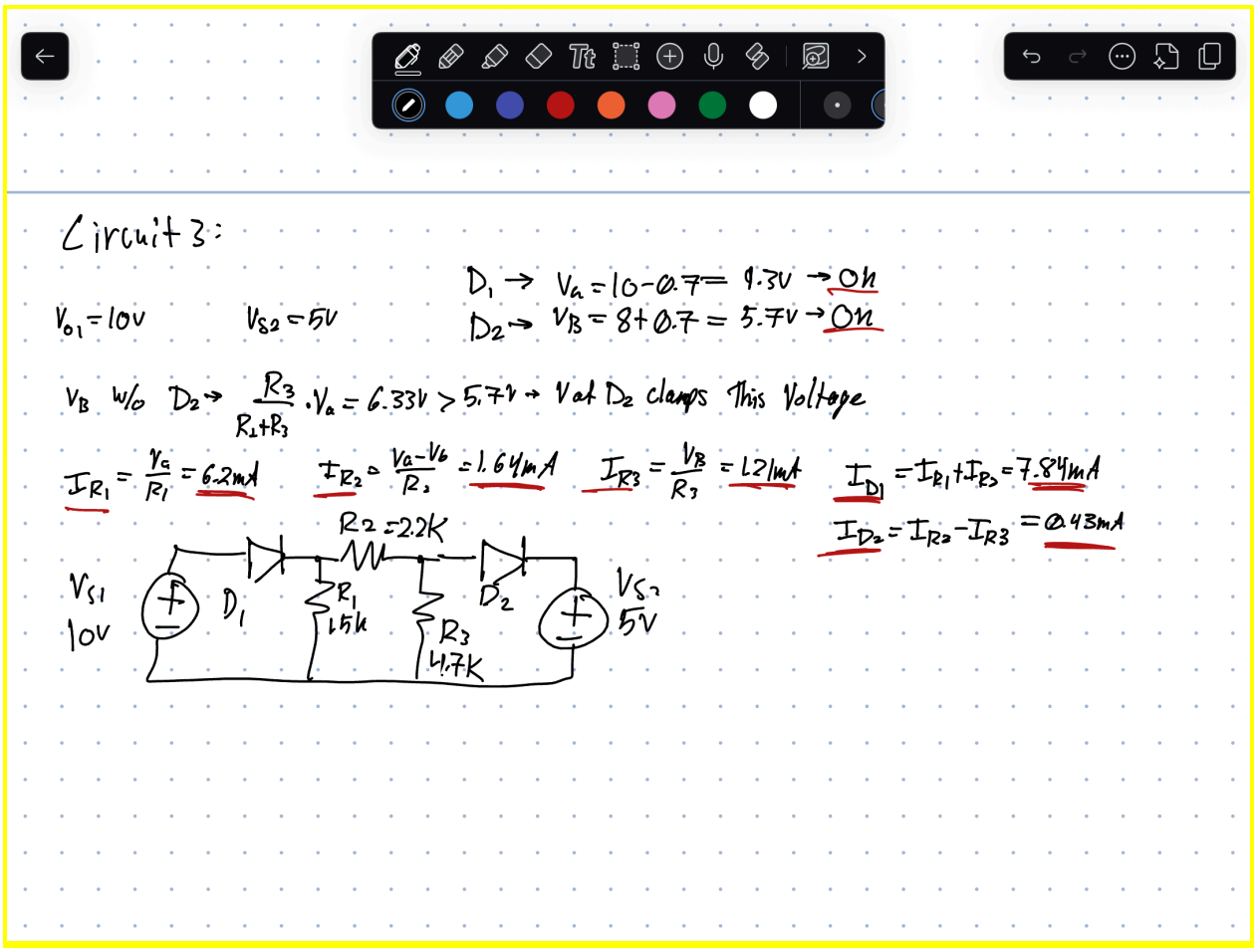

The table below shows the measured currents for circuit three:

Condition	Calculated					Measured				
	I_{D1}	I_{D2}	I_{R1}	I_{R2}	I_{R3}	I_{D1}	I_{D2}	I_{R1}	I_{R2}	I_{R3}
$V_{S1} = 10\ V$ and $V_{S2} = 5\ V$	*7.84mA*	*0.43mA*	*6.2mA*	*1.64mA*	*1.21 mA*	*10.01 mA*	*3.47mA*	*6.298 mA*	*3.725mA*	*.250 mA*

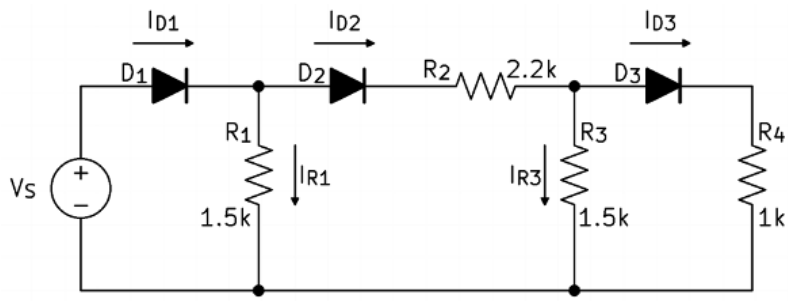

Figure 4: Fourth circuit given for Exercise B

According to your math, for the fourth circuit, which diodes are on?

Diodes 1 are on at 5V. All diodes on at 5 volts

Circuit 4)

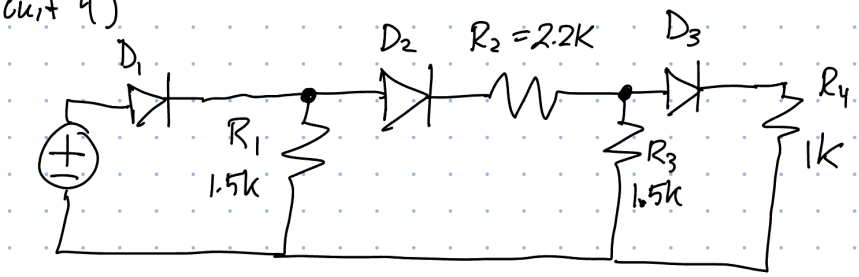

$I_{R_1} = \frac{V_1}{R_1} = 0.20mA$ $\quad I_{D_1} = I_{R_1} = 0.20mA$ $\quad I_{D_2} = 0,\ I_{D_3} = 0$ $\quad I_{R_1} = 0$

let $V_s = 5V$:

$D_1 = V_1 = 5 - 0.7 = 4.3V \rightarrow ON$

$D_2 = V_2 = V_1 - 0.7 = 3.6V \rightarrow ON$

$D_3 = V_3 = 1.1V \rightarrow ON$

$\frac{V_2 - V_3}{R_2} = \frac{V_s}{R_2} + \frac{V_s - 0.7}{R_4}$ $\quad V_3 = 1.1V,\ V_4 = 0.40V$

$I_{R_1} = \frac{V_1}{R_1} = 2.87mA$ $\quad I_{R_2} = \frac{V_2 - V_3}{R_2} = 1.14mA$

$I_{R_3} = \frac{V_3}{R_3} = 1.14mA$ $\quad I_{R_4} = \frac{V_4}{R_4} = 0.40mA$

$I_{D_1} = I_{R_1} = 1.14mA$ $\quad I_{D_3} = I_{R_4} = 0.40mA$, $\quad I_{D_2} = I_{R_1} + I_{D_2} = 4.01mA$

The table below shows the measured currents for circuit four:

Condition	Calculated					Measured				
	I_{D1}	I_{D2}	I_{D3}	I_{R1}	I_{R3}	I_{D1}	I_{D2}	I_{D3}	I_{R1}	I_{R3}
$1\ V$	*0.20mA*	*0*	*0*	*0.20mA*	*0*	*.295mA*	*.008uA*	*0uA*	*.288 mA*	*8.57 uA*
$5\ V$	*1.14mA*	*4.01mA*	*0.40 mA*	*2.87*	*1.14 mA*	*4.142 mA*	*1.176 mA*	*.477 mA*	*2.935mA*	*.682 mA*

Conclusion

Provide a summary of your design choices, issues, results, and achievements in this lab.

*Over*all this lab helped reinforce how real diodes behave compared to ideal models. Outmeasurements showed the expected forward voltage drops, exponential current growth, and the unique reverse-breakdown region of the Zener diode. In the circuit exercise, we confirmed when each diode would turn on and how that affected the current paths. The results lined up well without calculations, and any small differences were mostly due to component tolerances, by the end we have a much better feeling for reading I-V curves and for using diodes in practical circuits.